UNIQUE VACUUM
SOLUTIONS

TWO STAGE ROTARY PISTON VACUUM PUMP

IVPVP- SERIES

CAPACITY: 1800 LPM TO 9000 LPM **ULTIMATE VACUUM : $5x10^{-3}$ mBar**

TECHNICAL DATA:

MODEL	UNIT	IVPVP-1.8K	IVPVP-4.2K	IVPVP-7.2K	IVPVP-9.0K
Ultimate Pressure	torr	$5X10^{-3}$			
Inlet Port	mm	63	80	100	100
Exhaust Port	---	50	50	80	80
Motor Power 3 ph	kW	4.0	7.5	11.0	15.0
Cooling water	(LPM)	1.7	2.5	3.5	3.5
Weight of Pump	kg	28	32	35	51
Weight including motor	kg	380	710	960	1020

DIMENSION- IVPVP 1.8K

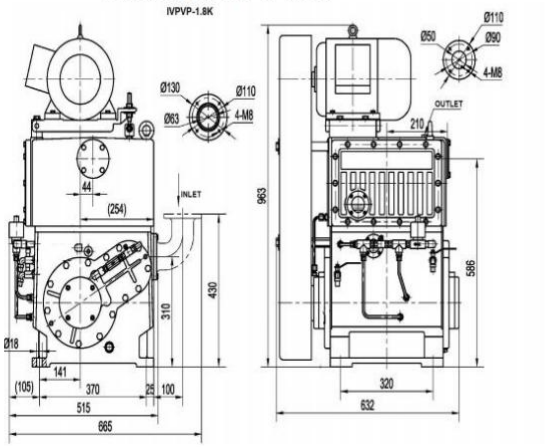

DIMENSION- IVPVP- 4.2K

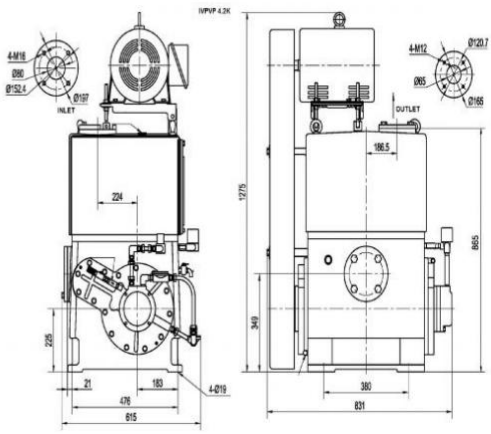

UNIQUE VACUUM SOLUTIONS

E: nagendrautpath@uniquevacuum.co.in
M: +91 9886726920
P: 080-28367059
A: Unique Vacuum Solutions, #57 8th cross 1st b cross, Doddanna Industrial Estate, Vishwaneedam Post, Peenya 2nd stage, Bengaluru 560091
www.uniquevacuum.co.in

UNIQUE VACUUM SOLUTIONS

Outside Dimensions

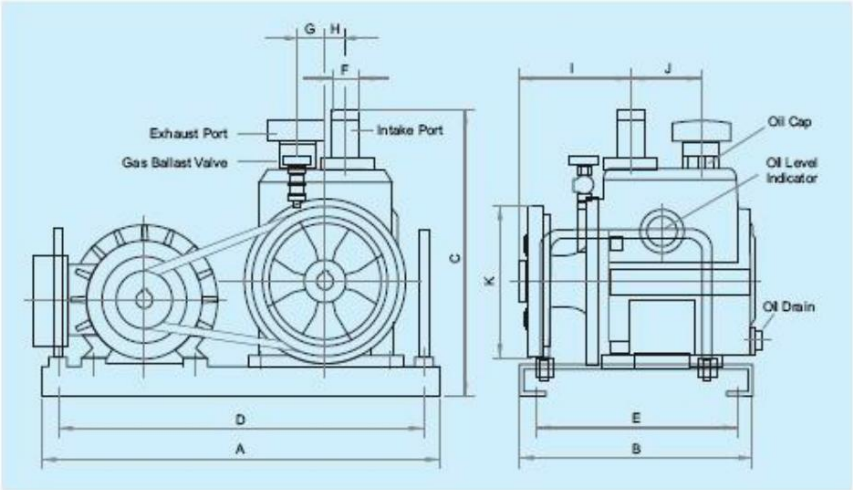

DIMENSIONS	MODEL	A	B	C	D	E	ØF	G	H	I	J	ØK	ØL
	IVP 100	463	250	285	425	175	25	30	20	122	73	171	13
	IVP 180	488	285	342	450	200	32	35	25	135	88	171	13
	IVP 300	545	310	365	515	275	32	40	30	145	100	171	13
	IVP 600	610	350	424	580	310	46	50	35	171	110	210	13
	IVP 1.0K	640	420	504	610	340	49.5	59	40.5	192	130	219	13

All dimensions are in mm

Applications:

Electrical Industry - Transformer oil purification - Impregnation - Capacitor **Metallurgy** - Vacuum Furnace - Degassing - Casting - **Impregnation Chemical / Pharma / Food Industry - Drying - Distillation - Evaporation - Solvent Extraction - Degassing Refrigeration & Air conditioning Vapour Absorption Machines Lamp Manufacturing - GS, TL, CFL Oil Treatment Jewellery Casting.**

UNIQUE VACUUM SOLUTIONS

E: nagendrautpath@uniquevacuum.co.in
M: +91 9886726920
P: 080-28367059
A: Unique Vacuum Solutions, #57 8th cross 1st b cross, Doddanna Industrial Estate, Vishwaneedam Post, Peenya 2nd stage, Bengaluru 560091
www.uniquevacuum.co.in